DEVIATIONS FOR DIMENSIONS WITHOUT TOLERANCES		
WELDING: ISO 13920 class B	CAL & MAC: TS-ISO 2768-mK	GEOMETRICAL TS: ISO 1101 class G

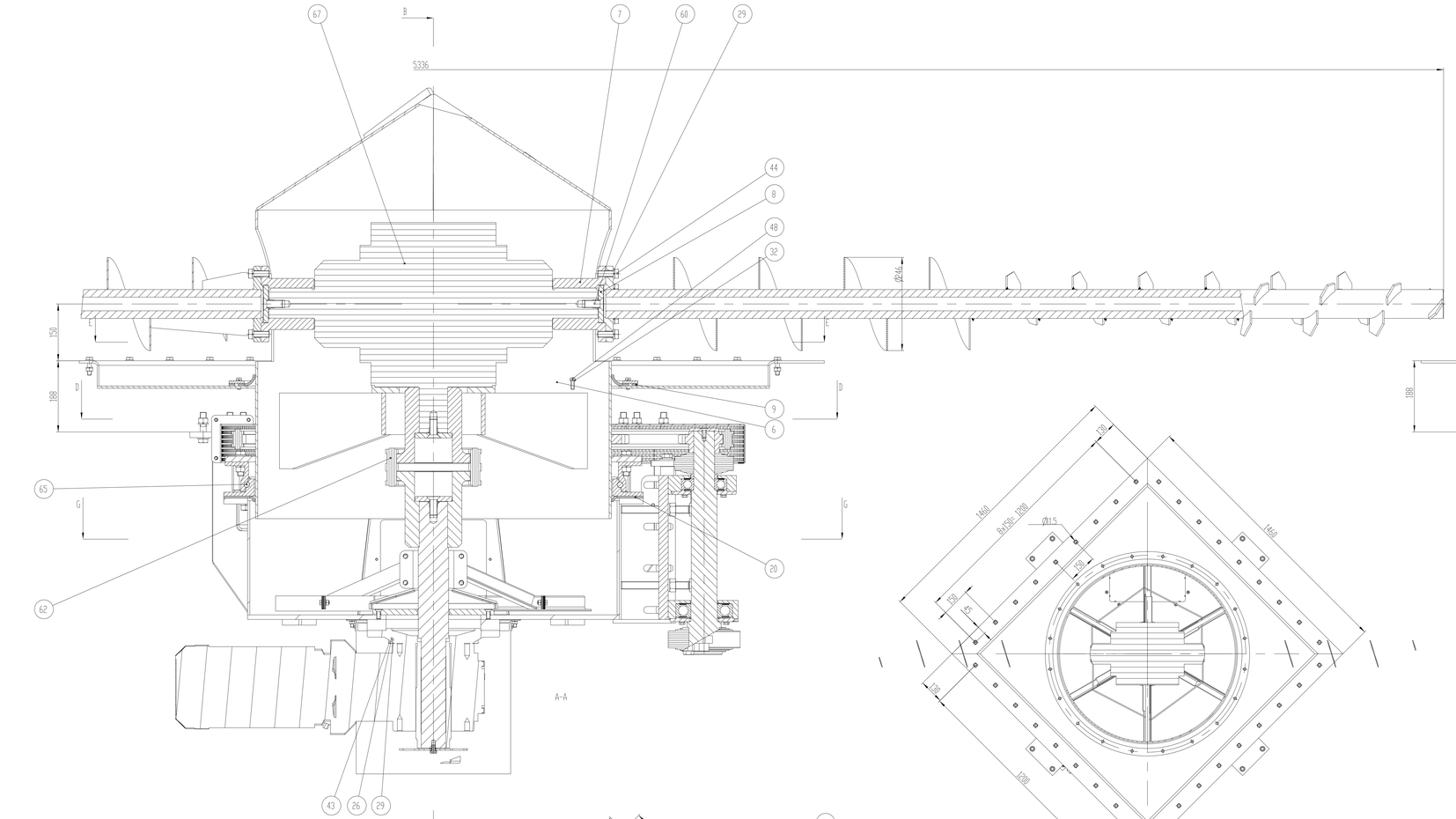

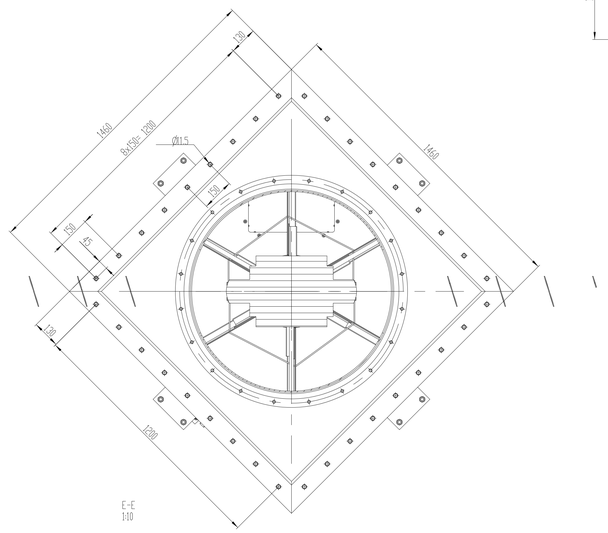

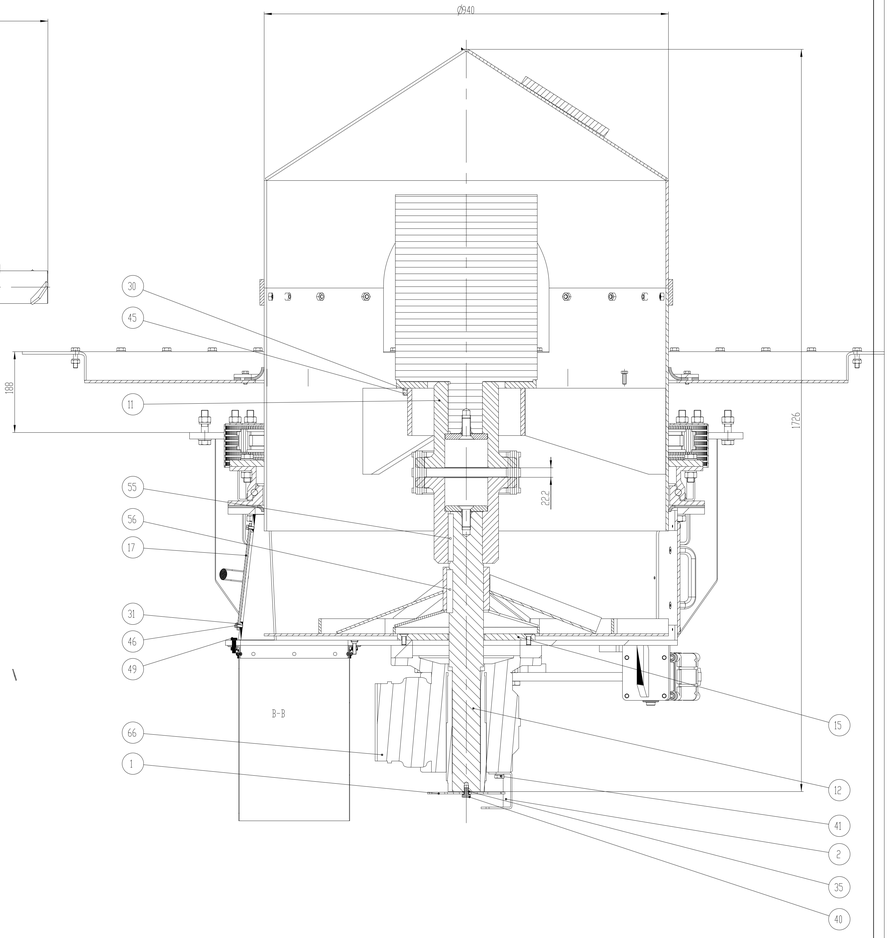

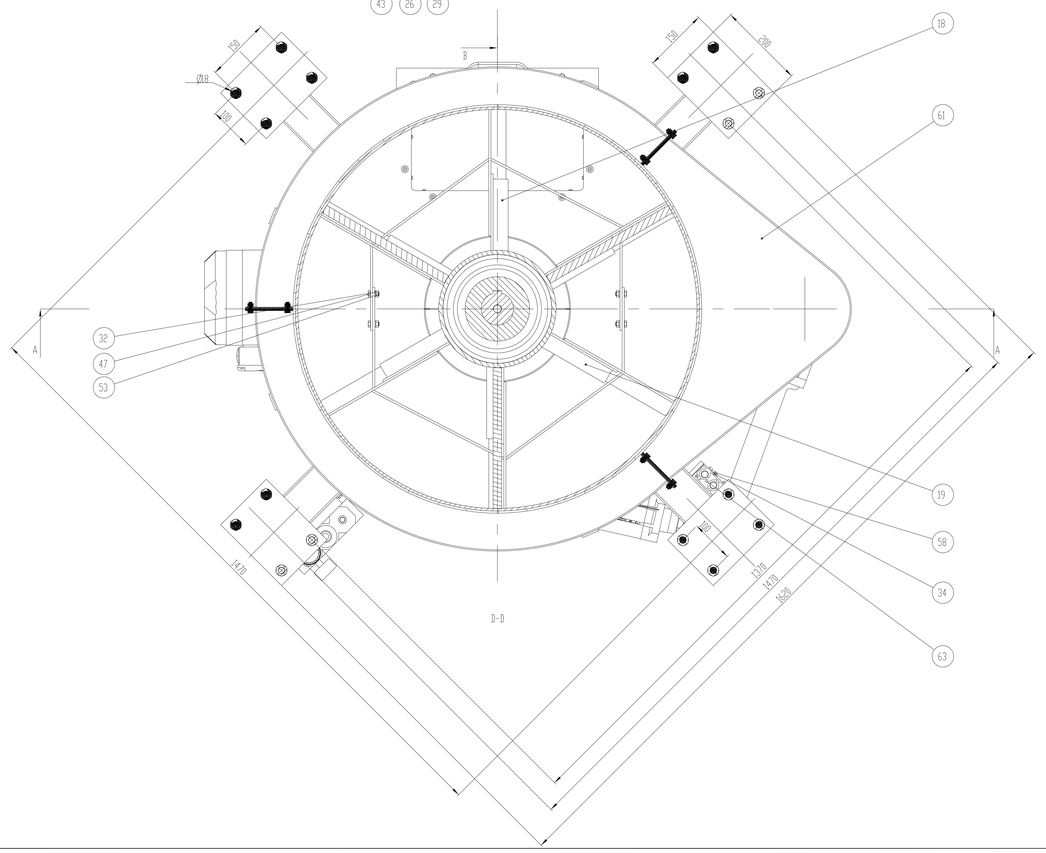

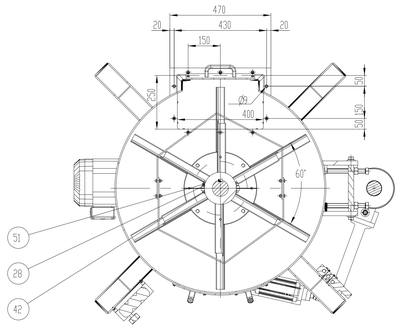

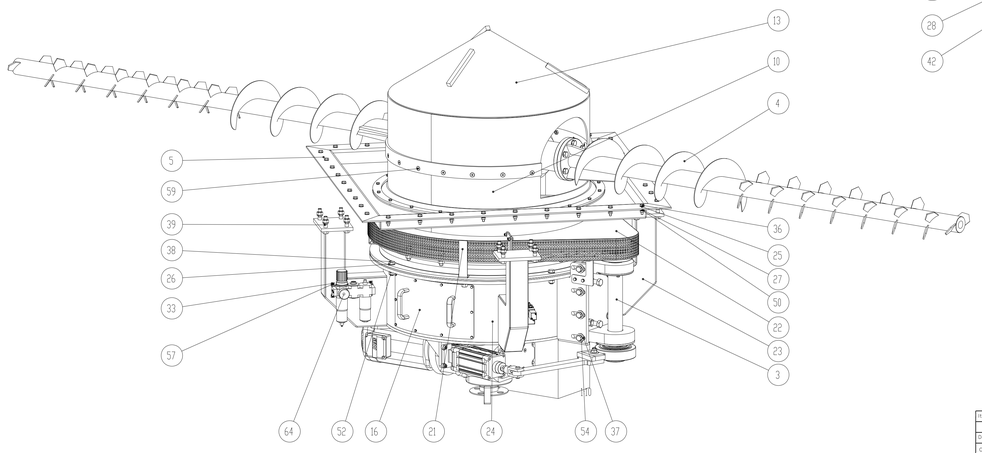

Item/ref	Title/Name, designation, dimension, etc.	Quantity	Drawing No.	material	mass (kg)	Note

	Date		Mass (kg)	izotech d.o.o.
Designed by	25-Dec-17	Jožef Kovačič	17288	Construction of industrial plants
Checked by	04-Jan-18	Franci Ilič		WWW.IZOTEH.SI
			Sheet /	

Scale	TITLE		
1:5	Primimzojda Ustroiство	THIS DRAWING MUST NEITHER BE PASTED ON TO ANY OTHER DOCUMENT NOR BE COPIED IN WHOLE OR IN PART, NOR BE GIVEN OR DISCLOSED TO ANY OTHER PERSON OR ENTERPRISE WITHOUT OUR PERMISSION.	
		DRAWING_NUMBER 40300	Edition 1